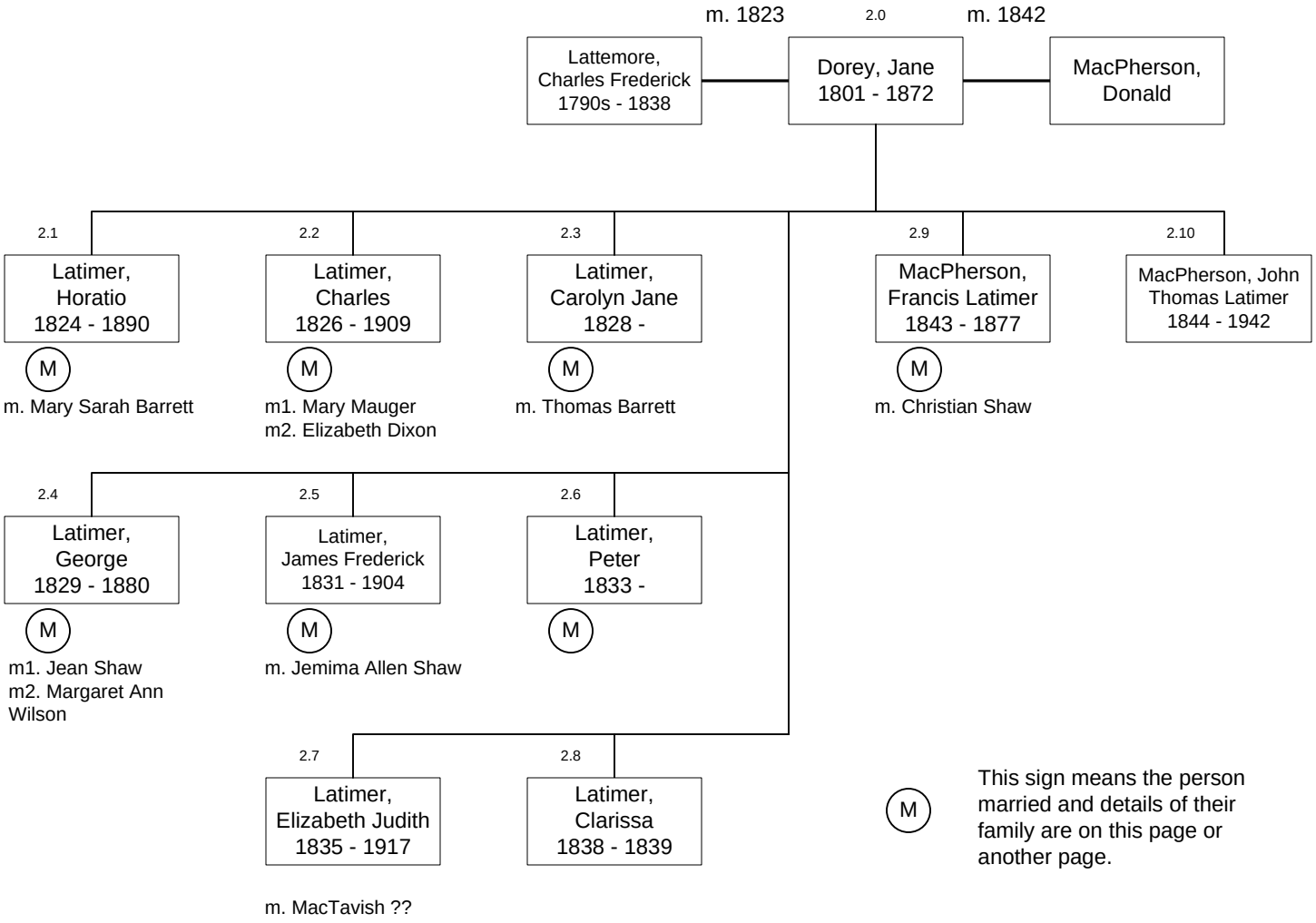
m. 1823
2.0
m. 1842
Lattemore, Charles Frederick 1790s - 1838
Dorey, Jane 1801 - 1872
MacPherson, Donald
2.1
Latimer, Horatio 1824 - 1890
M
m. Mary Sarah Barrett
2.2
Latimer, Charles 1826 - 1909
M
m1. Mary Mauger
m2. Elizabeth Dixon
2.3
Latimer, Carolyn Jane 1828 -
M
m. Thomas Barrett
2.9
MacPherson, Francis Latimer 1843 - 1877
M
m. Christian Shaw
2.10
MacPherson, John Thomas Latimer 1844 - 1942
2.4
Latimer, George 1829 - 1880
M
m1. Jean Shaw
m2. Margaret Ann Wilson
2.5
Latimer, James Frederick 1831 - 1904
M
m. Jemima Allen Shaw
2.6
Latimer, Peter 1833 -
M
2.7
Latimer, Elizabeth Judith 1835 - 1917
m. MacTavish ??
2.8
Latimer, Clarissa 1838 - 1839
M
This sign means the person married and details of their family are on this page or another page.

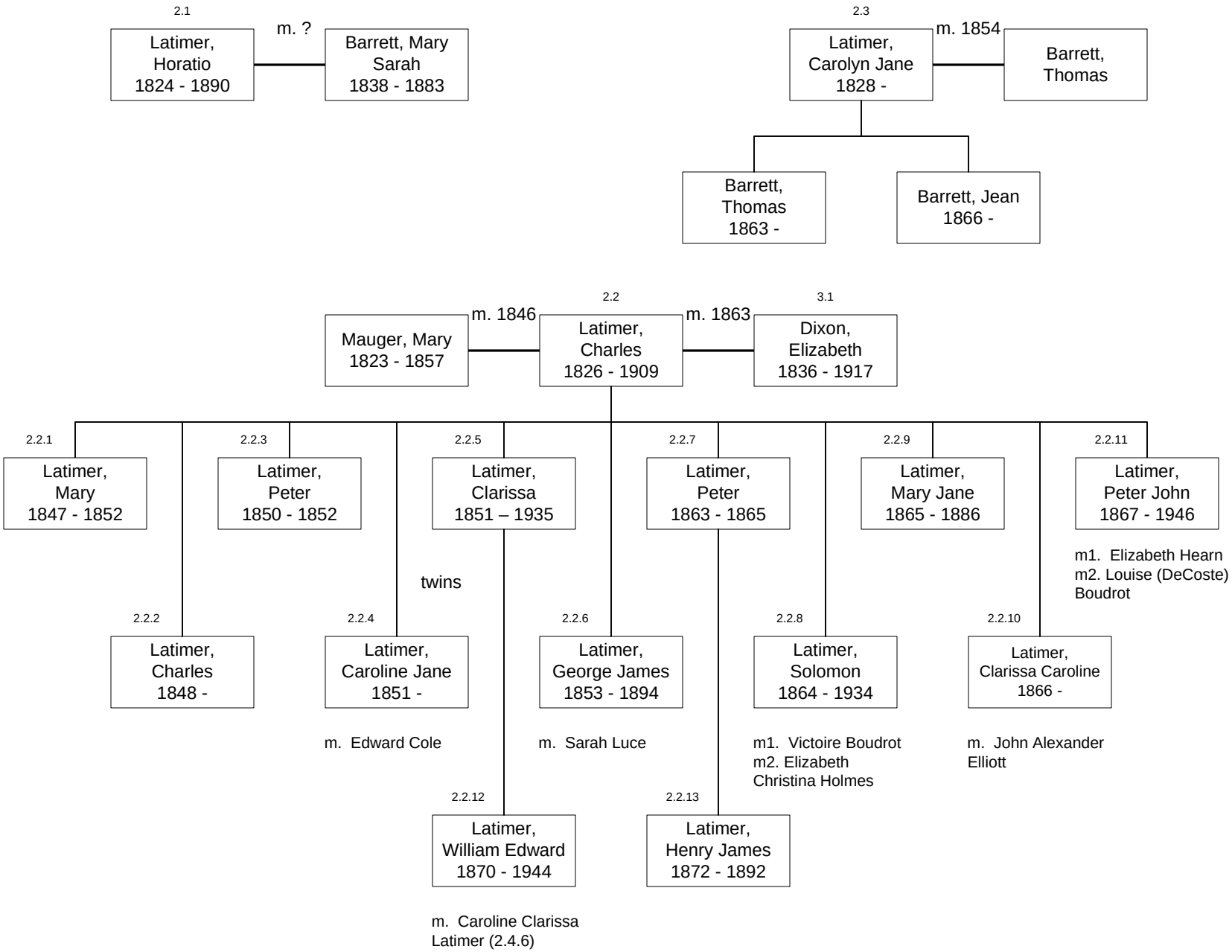
2.1
Latimer, Horatio 1824 - 1890
m. ?
Barrett, Mary Sarah 1838 - 1883
2.3
Latimer, Carolyn Jane 1828 -
m. 1854
Barrett, Thomas
Barrett, Thomas 1863 -
Barrett, Jean 1866 -
Mauger, Mary 1823 - 1857
m. 1846
2.2
Latimer, Charles 1826 - 1909
m. 1863
3.1
Dixon, Elizabeth 1836 - 1917
2.2.1
Latimer, Mary 1847 - 1852
2.2.3
Latimer, Peter 1850 - 1852
2.2.5
Latimer, Clarissa 1851 – 1935
2.2.7
Latimer, Peter 1863 - 1865
2.2.9
Latimer, Mary Jane 1865 - 1886
2.2.11
Latimer, Peter John 1867 - 1946
m1. Elizabeth Hearn
m2. Louise (DeCoste) Boudrot
twins
2.2.2
Latimer, Charles 1848 -
2.2.4
Latimer, Caroline Jane 1851 -
m. Edward Cole
2.2.6
Latimer, George James 1853 - 1894
m. Sarah Luce
2.2.8
Latimer, Solomon 1864 - 1934
m1. Victoire Boudrot
m2. Elizabeth Christina Holmes
2.2.10
Latimer, Clarissa Caroline 1866 -
m. John Alexander Elliott
2.2.12
Latimer, William Edward 1870 - 1944
m. Caroline Clarissa Latimer (2.4.6)
2.2.13
Latimer, Henry James 1872 - 1892

2.4

Shaw, Jean 1833 - 1858 — m. 1853 — Latimer, George 1829 - 1880 — m. 1864 — Wilson, Margaret Ann 1838 - 1893

- 2.4.1 Latimer, George James Frederick 1854 - 1948
  - m. Eva Albini Fonda
- 2.4.2 Latimer, Jane Elizabeth 1855 - 1868
- 2.4.3 Latimer, Jemima Allen 1856 - 1942
- 2.4.4 Latimer, Margaret Ann 1858 - 1858
- 2.4.5 Latimer, Margaret Agnes 1864 -
  - m1. Mr. Fonda
  - m2. Bion J. Arnold
- 2.4.6 Latimer, Caroline Clarissa 1867 - 1948
  - m. William Edward Latimer (2.2.12)
- 2.4.7 Latimer, Agnes Louise 1868 -
  - m. Herbert R. Starratt
- 2.4.8 Latimer, Jane 1870 -
  - m. John Tate
- 2.4.9 Latimer, Matilda Sarah 1874 -
- 2.4.10 Latimer, Horatio Charles 1876 - 1876
- 2.4.11 Latimer, Ida Maude 1877 -

2.5

Latimer, James Frederick 1831 - 1904 — m. 1860 — Shaw, Jemima Allen 1833 - 1894

- 2.5.1 Latimer, Charles Frederick 1862 - 1949
  - m. Leah Brown
- 2.5.2 Latimer, James Allen 1864 - 1930
- 2.5.3 Latimer, John 1865 - 1946
  - m. Mary Rosena Robertson
- 2.5.4 Latimer, Horatio Edward 1867 - 1875
- 2.5.5 Latimer, Jane Rosina 1868 - 1900
  - m. Samuel H. Bonner
- 2.5.6 Latimer, Henry Inglis 1868 - 1875
- 2.5.7 Latimer, George Albert 1871 - 1947
  - m. Mary Virginia Doyle
- 2.5.8 Latimer, Martha Ada 1873 - 1926
  - m. George Crowell
- 2.5.9 Latimer, Jemima Elizabeth 1875 - 1951
  - m1. James A. Clarke
  - m2. Mr. Meredith

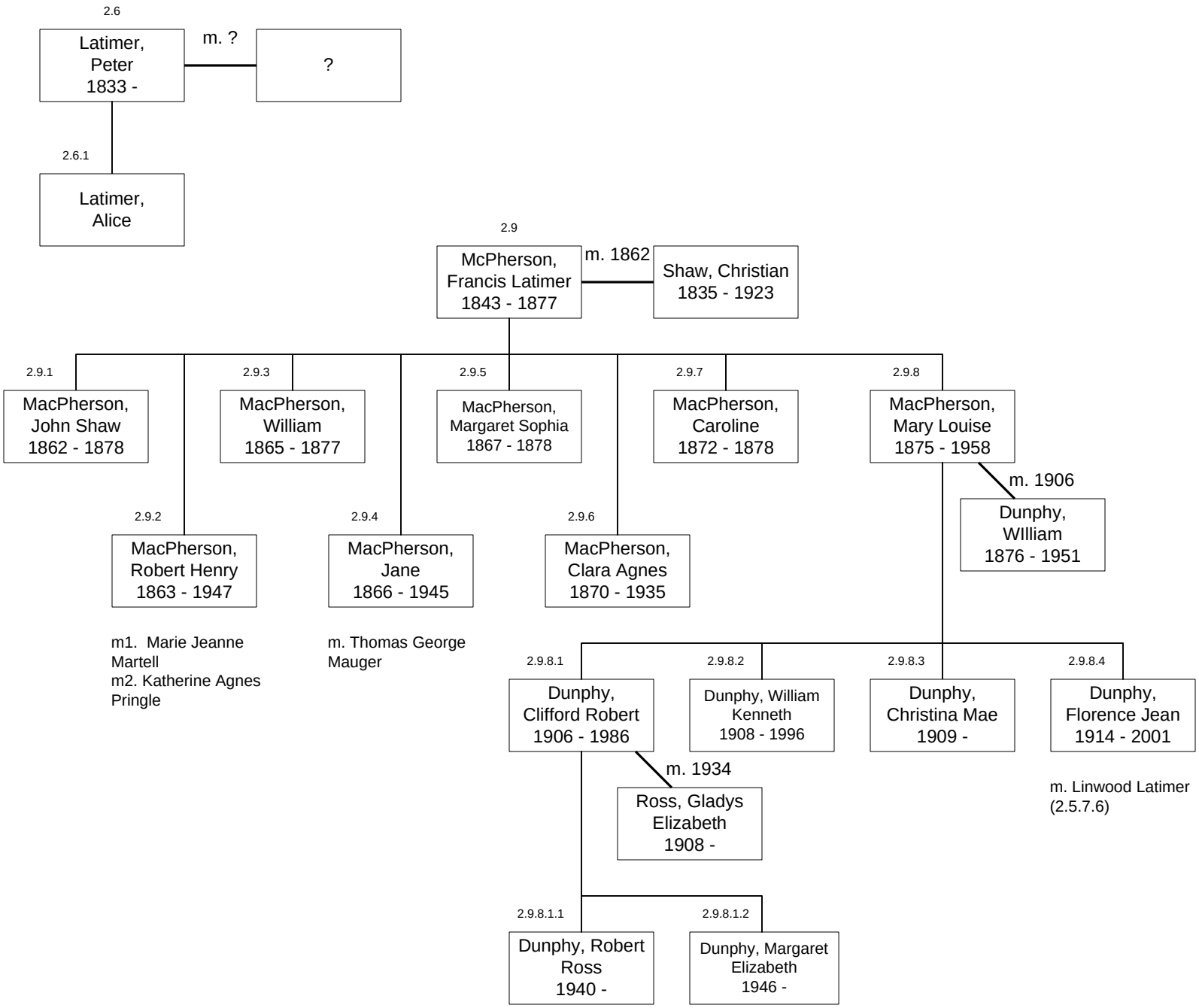
2.6
Latimer, Peter 1833 -
m. ?
?
2.6.1
Latimer, Alice
2.9
McPherson, Francis Latimer 1843 - 1877
m. 1862
Shaw, Christian 1835 - 1923
2.9.1
MacPherson, John Shaw 1862 - 1878
2.9.3
MacPherson, William 1865 - 1877
2.9.5
MacPherson, Margaret Sophia 1867 - 1878
2.9.7
MacPherson, Caroline 1872 - 1878
2.9.8
MacPherson, Mary Louise 1875 - 1958
m. 1906
Dunphy, WIlliam 1876 - 1951
2.9.2
MacPherson, Robert Henry 1863 - 1947
m1. Marie Jeanne Martell
m2. Katherine Agnes Pringle
2.9.4
MacPherson, Jane 1866 - 1945
m. Thomas George Mauger
2.9.6
MacPherson, Clara Agnes 1870 - 1935
2.9.8.1
Dunphy, Clifford Robert 1906 - 1986
m. 1934
Ross, Gladys Elizabeth 1908 -
2.9.8.2
Dunphy, William Kenneth 1908 - 1996
2.9.8.3
Dunphy, Christina Mae 1909 -
2.9.8.4
Dunphy, Florence Jean 1914 - 2001
m. Linwood Latimer (2.5.7.6)
2.9.8.1.1
Dunphy, Robert Ross 1940 -
2.9.8.1.2
Dunphy, Margaret Elizabeth 1946 -